POLNA ENGINEERING Sp. z o.o.
ul. T. Kościuszki 227
40-600 Katowice
tel. +48 32 781 85 17
fax +48 32 750 06 65
e-mail: polna@polna-eng.pl
internet: www.polna-eng.pl

PUMP WITH MANUAL DRIVE **TYP PR14**

APPLICATION:

The pump is used for periodical plastic grease feeding to machine mating faces through distributors (two-way feeder). It is recommended for use in machines and devices with up to 50 lubrication points, operating periodicallu and requiring not very frequent lubrication.

CONSTRUCTION:

The pump consists of the following assemblies: lubricant tank, pump body with forcing system elements, distribution slide altering the lubricant feeding direction, drive lever, manometer with pulsation muffler and a tank-filling coupling. In the lubricant tank, there is a spring piston connected to a shank with marks indicating the maximum and minimum content of the tank.

PRINCIPLE OF OPERATION:

The pump is driven by the lever. The power is transmitted with a gear wheel sector to the bidirectional piston. During the piston reciprocating movement, the lubricant is sucked from the tank and forced through the return valve to the distribution slide chamber. The distribution slide is set manually with a handle in one of the extreme positions. Depending on the position of distribution slide, the grease is forced to one of the two main lubrication conduit lines and then to the dosing feeders. After the lubricant is fed to the reception points, forcing is continued and lubricant pressure increases which is indicated by the manometer located on the pump. At this moment the pump operation stops and the distribution slide is switched into the other extreme position. After the preset time-lag the pump is activated again and the operation cycle repeats analogically with the other lubrication main conduit line. The spring piston falls down as the content of lubricant in the tank decreases, which facilitates sucking the lubricant by the forcing system. The pump tank is filled with lubricant by the filling pump PZ20.

TECHNICAL SPECIFICATION:

Delivery	8 cm3 /double piston stroke
Nominal pressure	10 MPa
Tank cpacity	3 dm3
Thrust force on the laver an nominal pressure	120 N
Type of lubricant forced	plastic greaseof the consistence class < 1 acc. PN-72/C-04095 (NLGI)
Ambient temperature	-10 ... 60°C
Weight	9,8 kg

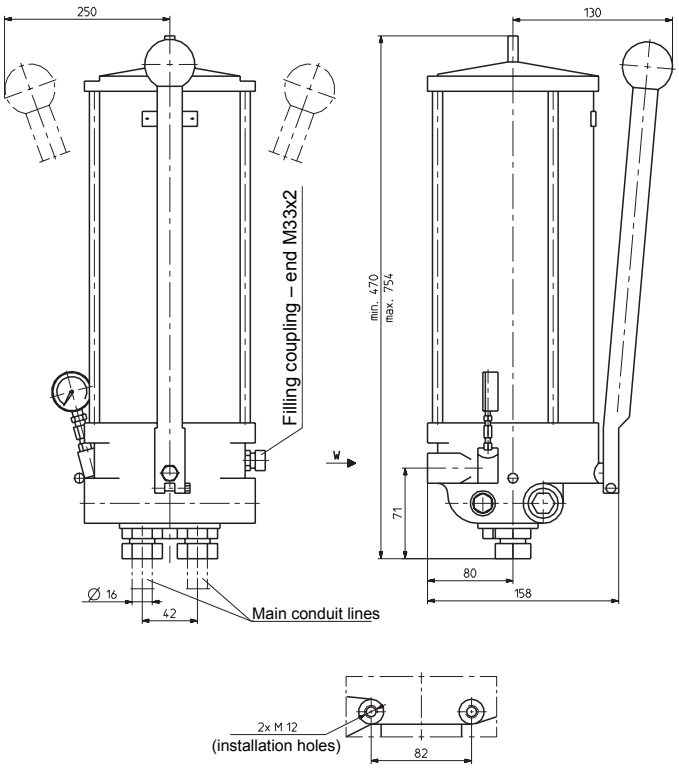

Fig. 1 Overall and linkage dimensions of the pump

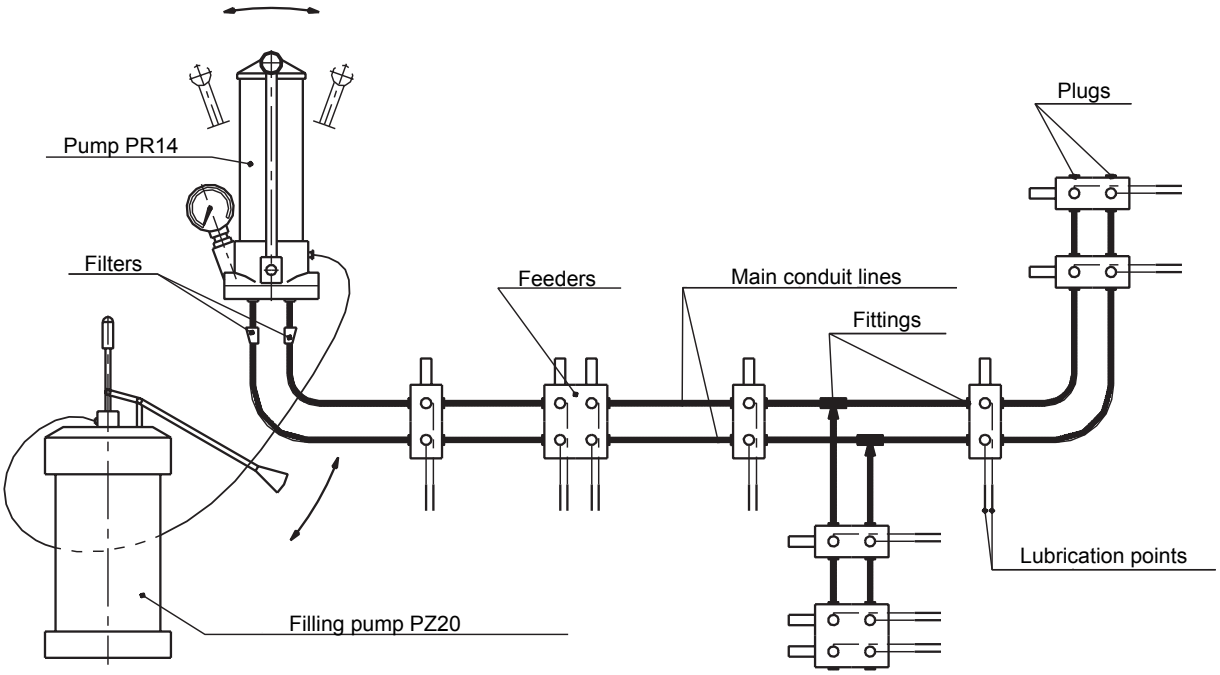

Fig. 2 Example scheme of an oiling system