POLNA ENGINEERING Sp. z o.o.
ul. T. Kościuszki 227
40-600 Katowice
tel. +48 32 781 85 17
fax +48 32 750 06 65
e-mail: polna@polna-eng.pl
internet: www.polna-eng.pl

PRESSURE REDUCER **RCP-8**

FUNCTION:

Pressure regulators are designed to maintain constant pressure downstream the valve regardless of fluctuation of supply pressure. Regulators are used in pipe networks with fluid being steam, air or inflammable gas, in order to prevent the installation against excess pressure increase. Other applications need to be consulted with the Manufacturer.

CONSTRUCTION:

Regulator comprises three main units:
- globe valve with balanced plug and with stem bellow sealed (1)
- diaphragm actuator (2),
- adjuster set (3).

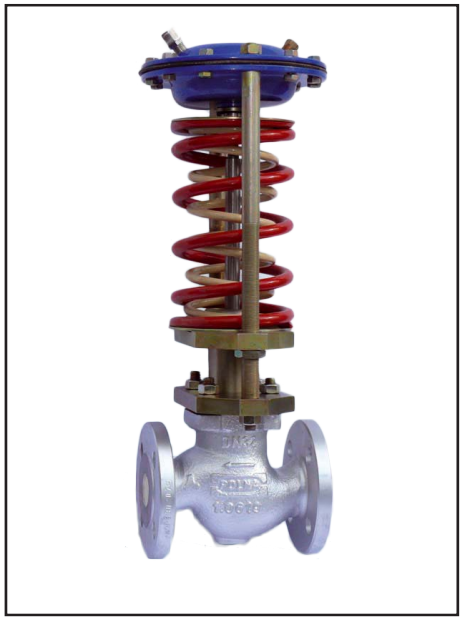

PRINCIPLE OF OPERATION:

Regulator is open on power failure. Increase in the regulated pressure causes valve closing. Self-operated regulator constitutes valve control device that is driven by fluid flowing through the valve. The impulse of regulated pressure, as measured downstream the valve (1), is applied to the actuator pressure chamber (2). The resulting pressure on the actuator diaphragm, which is evoked by regulated pressure, is counterbalanced by the spring tension in the adjuster set (3). Thus, a change in the regulated pressure causes valve plug displacement till the regulated pressure attains its set-up value.

TECHNICAL DATA:

Pressure		
Nominal Pressure	Body	PN40
	Flange	PN16/40
Max. medium pressure		2,5 MPa
Proportional range		Xp=16%

Medium	Max.temp.	Tightntness class
Air, gases	90^{0}C	VI kl. wg. PN-EN 60534-4
water	130^{0}C	VI kl. wg. PN-EN 60534-4
steam	240^{0}C	VI kl. wg. PN-EN 60534-4

MATERIALS:

	Materials		Norm
Body	GP240GH	1.0619	PN-EN 10213-2
	GX5CrNiMo19-11-2	1.4408	PN-EN 10213-4
Bonnet	C15E	1.1141	EN 10084
	X6CrNiTi18-10	1.4541	PN EN 10088
Plug, seat	X17CrNi16-2	1.4057	
	X6CrNiTi18-10	1.4541	
Stem	X17CrNi16-2	1.4057	
	X6CrNiTi18-10	1.4541	
Bellow seal	X6CrNiMoTi17-12-2	1.4571	
Plug gasket	PTFE+ bronze lub grafit		
	EPDM		
	NBR		
Diaphragm	EPDM with poliester texture		
	NBR with poliester texture		

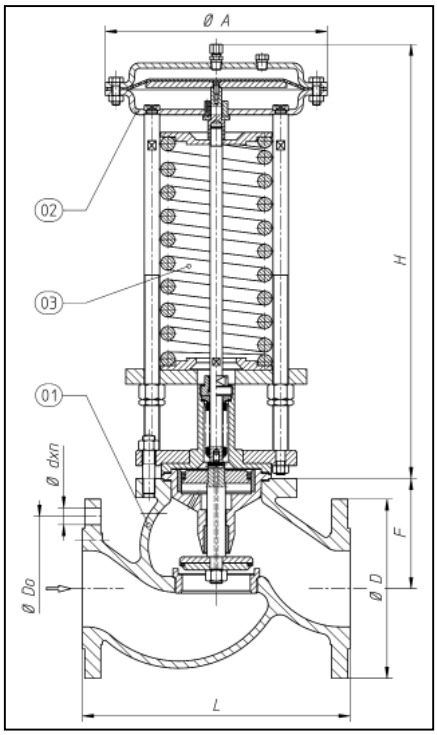

DIMENSIONS:

Diameter DN		15	20	25	32	40	50	65	80	100	125	150	200
Kvs coefficient[1)]		4	5	6,5	13,5	22	33	46	66	94	130	170	250
D [mm]	PN16	95	105	115	140	150	165	185	200	220	250	285	340
	PN25-40									235	270	300	375
L[mm]	PN 16-40	130	150	160	180	200	230	290	310	350	400	480	600
D_0 [mm]	PN16	65	75	85	100	110	125	145	160	180	210	240	295
	PN25-40									190	220	250	320
d [mm]	PN16	14	14	14	18	18	18	18	18	18	18	22	22
	PN25-40									22	26	26	30
n	PN16	4	4	4	4	4	4	4	8	8	8	8	12
	PN25-40							8					
F [mm]		63	63	63	80	82	86	118	118	124	150	173	216
Weight[kg]		18	20	30	33	38	41	49	58	75	110	157	220

1) Other Kvs coefficients can be prepared for the order

Acutator		Springs [kPa]	
Surface [cm²]	Ø A		
80	190	200-950 200-1100	
100	190	150-750	
160	230	30-160 50-240 60-300 80-400 100-480 100-560	
320	290	10-40 15-80 30-160 50-280	80-375 100-550
Wysokość max.	H	400	625

MONTAGE

Reducer should be installed on the horizontal pipe and with down direct spring. Flow should be with accordance with arrow on the valve body. It is recommended to use net strainer type FS. Reducer is delivered with impulse pipe and with necessary impulse pipe connection (reducer for steam is also equipment with condensation vessel). Reducer is adjusted for order pressure..