POLNA ENGINEERING Sp. z o.o.
ul. T. Kościuszki 227
40-600 Katowice
tel. +48 32 781 85 17
fax +48 32 750 06 65
e-mail: polna@polna-eng.pl
internet: www.polna-eng.pl

DOUBLE-PORTED CONTROL VALVES **TYPE Z1B®**

APPLICATION AREA:

Single-ported globe control valves type Z1B are used in automatic and remote control instalations as flow control elements to adjust flow of liquids, steam and gases. Wide range of materials, excellent pressure and temperature parameters, multiple design variants, meeting requirements of various processes, make the valves applicable under the most demanding working conditions in power generation, petroleum chemistry, heating, chemical industry, metallurgy, etc. Versions designated for Western Europe market can be marked BR12.

FEATURES:

- various materials of valve body and internal parts, adapted to specific working conditions,
- design provides noise reduction, enhanced resistance to cavitation and flashing, and elimination of choked flow,
- wide range of nominal pressures, PN10 to CL2500, and flow ratio and control characteristics,
- reduction in aggressive and toxic media emissions to environment through application of bellow seal bonnets or bonnet packings meeting requirements of TA - LUFT,
- easy assembly and dismantling of valve internal parts for maintenance and service,
- high durability and reliability due to application of top-class materials and surface improvement processes (burnishing, stelliting, heat treatment, CrN coatings),
- possibility of mating with reverse action P/R (column) and P1/R1 (cast yoke) multi-spring actuators, and changing the spring range with no extra parts (keeping the number of springs),
- possibility of fitting actuators with lateral (P1/R1) or top (P/R) handwheel,
- possibility of performing diagnostics of “valve-actuator” due to application of smart electro-pneumatic positioners,
- wide range of electric actuators,
- special executions for oxygen, hydrogen, gas fuels, low temperature fluids (liquid oxygen, liquid nitrogen), acid gases containing H_2S; with heat jacket; for explosive atmospheres as per ATEX Directive 94/23/EC,
- design and production process meet the requirements of Quality Management System ISO 9001 and Directive 97/23/EC, and regulations of AD2000 Merkblatt, designated for installation on pipelines.

Z1B ® is a trademark registered with Republic of Poland Patent Office.

DESIGN AND TECHNICAL SPECIFIACTION:

***Body** (1)*: single-ported, cast

Nominal size: DN 25; 40; 50; 80; 100; 150; 200; 250; 300

Nominal pressure:

- PN10; 16; 25; 40; 63; 100; 160; 250; 320; 400 (as per PN-EN 1092-1:2010)
- PN-H-74306:1985; PN-H-74307:1985.
- CL150; CL300; CL600; CL900; CL1500; CL2500 (as per PN-EN 1759-1:2005).

divided as follows: DN25...250: PN10...100; CL150…CL600 *)
DN25...150: CL900; PN160 *)
DN25...100: PN250…400; CL1500…CL2500 *)

*) higher nominal pressures available after agreement with the manufacturer

Connections: - flanged: as per Table 1
- butt welding ends BW, as per Table 19 and 20
- socket welding ends SW, as per Table 21

Steel flanges CL150; CL300; CL600; CL900; CL1500; CL2500 are so designed that they can be assembled with flanges as per American standards ANSI/ASME B16.5 and MSS SP44. In American standards flanges are identified with nominal values in “Classes”, to which nominal pressure (PN) values as per PN-ISO 7005-1:2002 correspond.

Equivalent identification as per PN are: CL150: PN 20 CL300: PN 50
CL600: PN 110 CL900: PN 150
CL1500: PN 260 CL2500: PN 420

Table 1. Flanged end connections

Nominal pressure	Facing of flange types			
	Raised face	Groove	Recess	Ring - joint
	Identification			
PN10; 16; 25; 40; 63; 100; 160; 250; 320; 400	B 3)	D 1)	F 1)	-
CL150; 300	B 3)	DL (D1 2)	F (F1 1)	J (RTJ)
CL600; 900; 1500; 2500	B 3) (RF)	DL (GF)	F (FF)	J (RTJ)
1) - do PN160; 2) - tylko dla CL300; 3) - B1 – (Ra=12.5 μm, concentric surface structure “C”), B2 – (Ra as agreed with the customer); () - identification of connections as per ASME B16.5				
Possible execution of flanges per specification and indicated standards				

Face-to-face dimensions: - flanged valves as per PN-EN 60534-3-1; PN-M-74005; ISA S75.16-1993; Fig. 5**;** Table 16; 17
- welding ends valves; Fig. 5; Table 18
- as per PN-EN 60534-3-3: for PN 10...100 and CL150…600
- as for flanged valves PN 160: for PN 160 and CL900
- as for flanged valves PN 400: for PN 250...400 and CL1500…2500

Materials: - as per Table 2;
Relationship between working pressure and temperature as per Table 3…9.

Bonnet (2): - standard
- extension
- bellows seal (PN10…40; CL150…300)

Valve plug (3a,b,c): - piston, sleeve guided, hard. Rangeability: 50:1
- variants: unbalanced,
balanced, (from DN40 - K_{vs} 25),
balanced with pilot, (from DN50 - K_{vs} 40)
- flow characteristics: equal percentage - P
linear - L

Valve seat (4): - fitted-in and sealed with body, hard (tight seat after consulting the manufacturer)

Valve plug stem (5): - burnished, polished sealing face.

Control cage (6A): - perforated element executing preset flow characteristics and fixing seat.

Choke cage (6B,C): - perforated valve seat fixture, causing reduction in pressure drop between seat and plug.

Body gasket (7), seat gasket (8), control cage gasket (9): spiral, graphite+1.4404 in all executions.

Stem packing (9): - PTFE-V packing, compressed with spring bolt (18a),
- ring gaskets formed in braided packing cords (PTFE +GRAPHITE),
- graphite kits (expanded and silky graphite) or gaskets formed in braided graphite cords,
- TA-LUFT sealing with PTFE-V packing kit or graphite kit; packing structure as per Fig.s 1 and 2, range of applications as per Table 10.

Leakage class: (as per PN-EN 60534-4)
-basic: (class IV) less than 0,01% Kv_s
-enhanced: (class V) $3 \cdot 10^{-4}$ $D \cdot \Delta p$ [cm^3/min]
where D (mm) - is seat diameter as per Table 10
Δp [bar] -actual pressure drop in closed valve.

Fluid flow direction: Under the plug for valves as per Fig. 1a and 1b, over the plug for valves as per Fig. 1 c

Flow coefficients: as per Table 11.

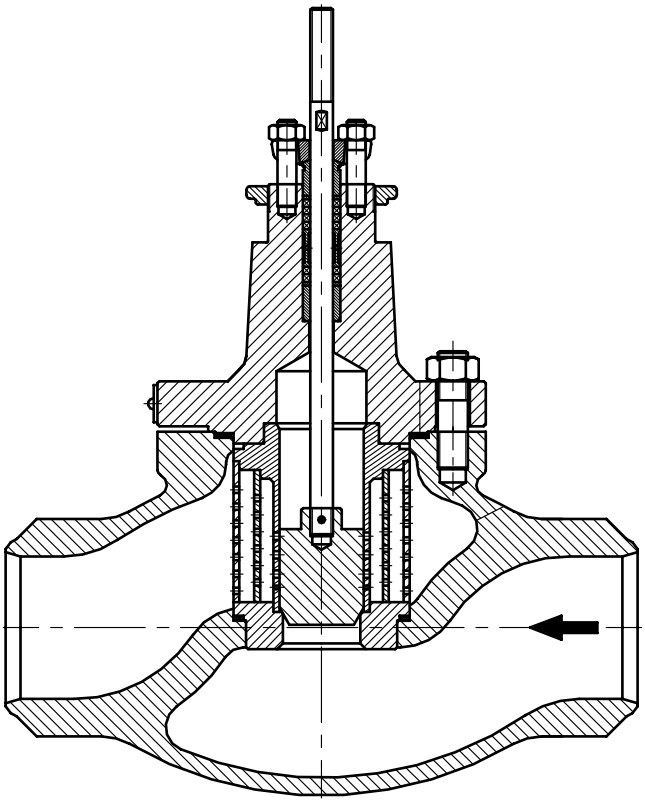

Fig. 1a. Valve Z1B - unbalanced plug.

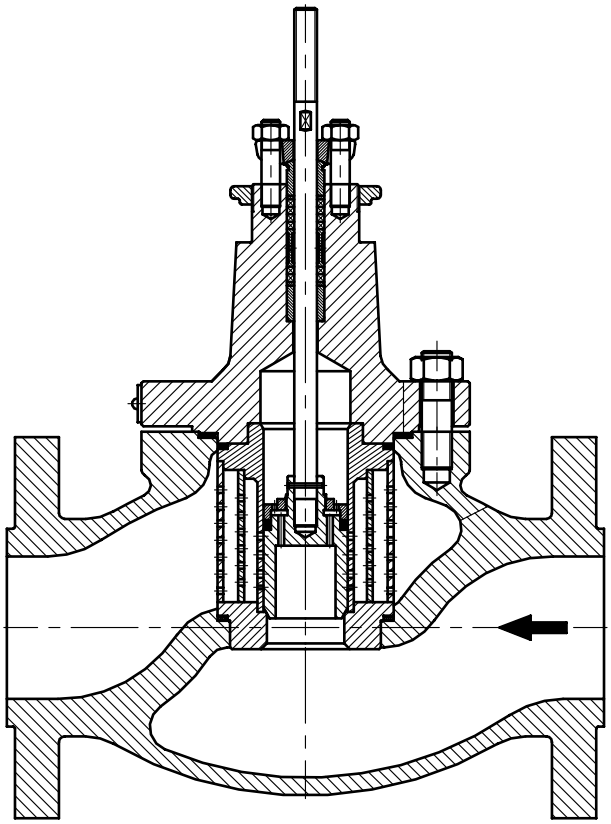

Fig. 1b. Valve Z1B - balanced plug.

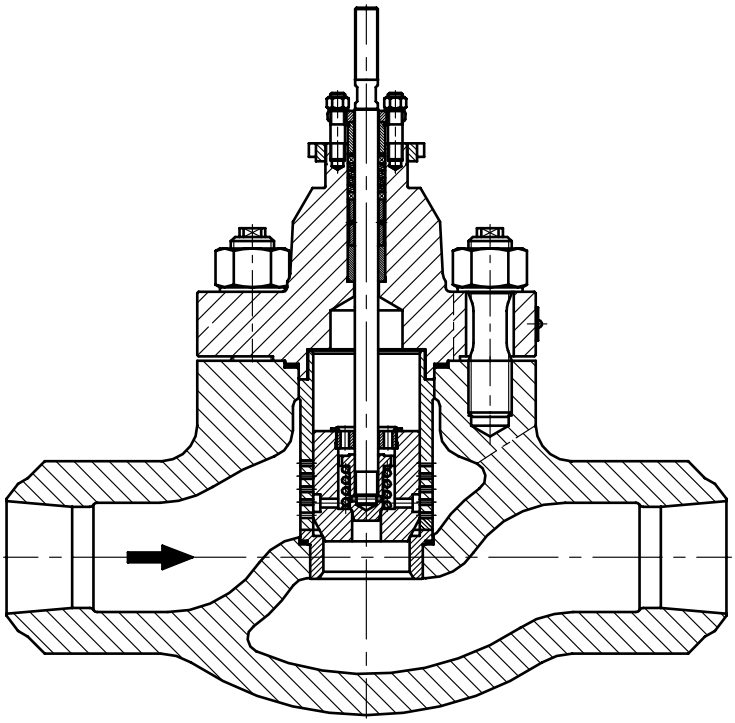

Fig. 1c. Valve Z1B - balanced plug with pilot.

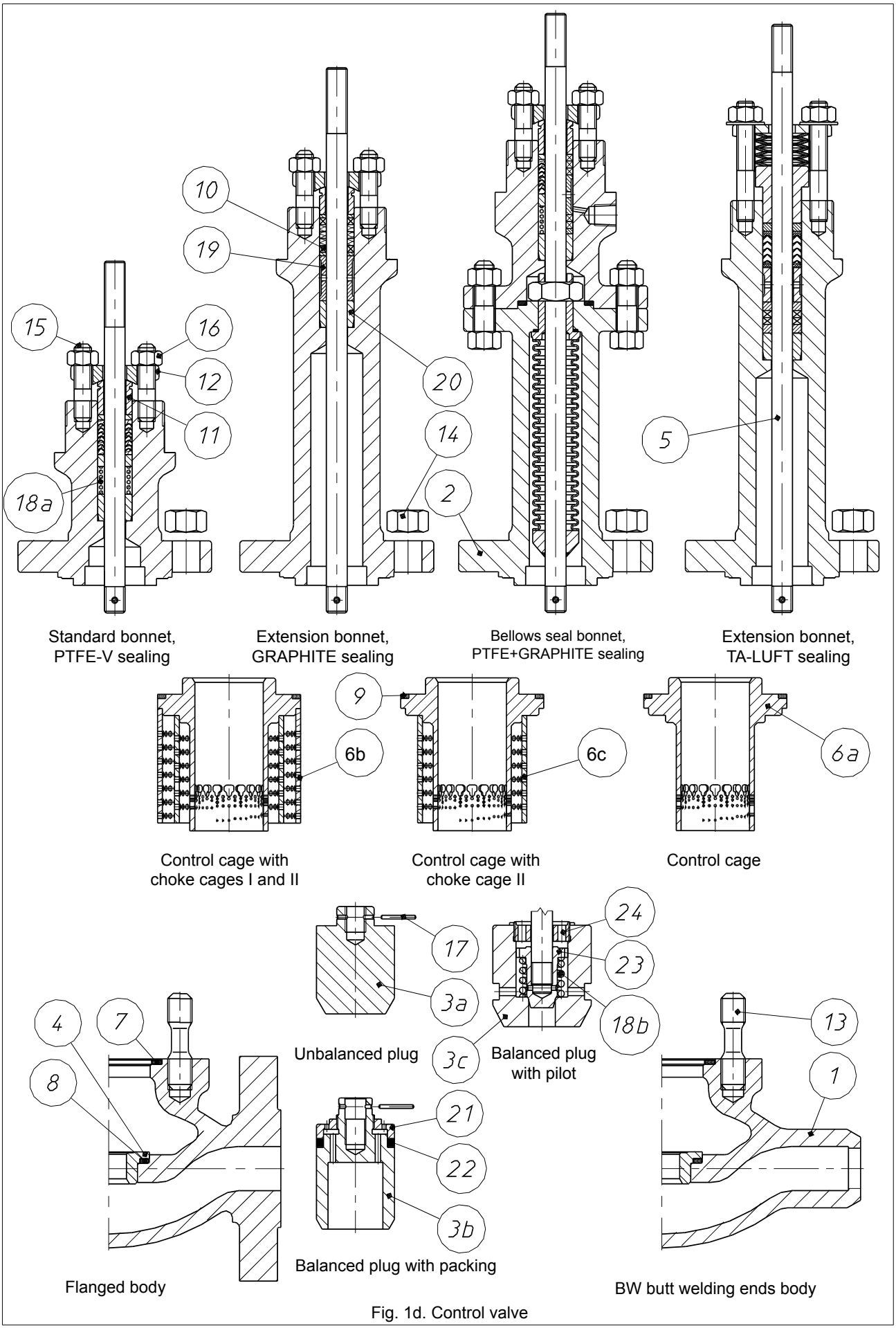

Fig. 1d. Control valve

Table 2. Part list with materials

Item	Part		Materials		
1	Body		GP 240 GH ; (1.0619) WCB	G17CrMo 9-10 ; (1.7379) WC9	GX5CrNiMo 19-11-2 ; (1.4408) CF8M
2	Bonnet	DN15…50	S 355 J2G3 (1.0570)	13CrMo4-4 ; (1.7335)	X6CrNiMoTi 17-12-2 ; (1.4571)
		DN80…300	GP 240 GH ; (1.0619) WCB	G17CrMo 9-10 ; (1.7379) WC9	
3a,b,c	Unbalanced plug Balanced plug Balanced plug (pilot)		X6CrNiMoTi 17-12-2; (1.4571) + stellite + CrN X17CrNi 16-2 ; (1.4057) + heat treatment		
4	Seat		X6CrNiMoTi 17-12-2; (1.4571) X6CrNiMoTi 17-12-2; (1.4571) + stellite X17CrNi 16-2; (1.4057) + heat treatment		
5	Stem		X6CrNiMoTi 17-12-2; (1.4571) X6CrNiMoTi 17-12-2; (1.4571) + stellite + CrN X17CrNi 16-2 ; (1.4057) + heat treatment		
6A	Control cage		X6CrNiMoTi 17-12-2; (1.4571) X17CrNi 16-2; (1.4057) + heat treatment		
6B	Choke cage I				
6C	Choke cage II				
7	Body gasket		GRAPHITE (98%) + 1.4404 (spiral)		
8	Seat gasket				
9	Control cage gasket				
10	Packing kit		PTFE + GRAPHITE		
			PTFE „V" (rings)		
			GRAPHITE		
11	Pressing sleeve		X6CrNiMoTi 17-12-2; (1.4571)		
12	Pressing level		S 355 J2G3 ; (1.0570)		
13	Body screw	PN10…CL300	8.8	A4 - 70 *)	
		PN63…CL2500	42CrMo4 (1.7225)	21CrMoV5-7 (1.7709)	X6NiCrTiMoVB 25-15-2 (1.4980)
14	Body nut	PN10…CL300	8.8	A4 - 70 *)	
		PN63…CL2500	42CrMo4 (1.7225)	21CrMoV5-7 (1.7709)	X6NiCrTiMoVB 25-15-2 (1.4980)
15	Bonnet screw		8.8	A4 - 70 *)	
16	Bonnet nut		8.8	A4 - 70 *)	
17	Notched peg		X6CrNiMoTi 17-12-2; (1.4571)		
18a,b	Spring		12R10 (SANDVIK), 9Ru10; ((1.4568) (SANDVIK)); Nimonic 90; (2.4969)		
19	Spacer sleeve		X6CrNiMoTi 17-12-2; (1.4571)		
20	Guide sleeve		X6CrNiMoTi 17-12-2; (1.4571) + stellite + CrN X17CrNi 16-2 ; (1.4057) + heat treatment		
21	Plug nut		X6CrNiMoTi 17-12-2; (1.4571)		
22	Plug sealing ring		Expanded graphite		
23	Pilot		X105CrMo17; (1.4125)		
24	Back nut		X6CrNiMoTi 17-12-2; (1.4571)		

Relevant material standards	
Material	Standard
GP 240 GH ; (1.0619)	PN-EN 10213-2
WCB	ASTM A 216
G17CrMo 9-10 ; (1.7379)	PN-EN 10213-2
WC9	ASTM A 217
GX5CrNiMo 19-11-2 ; (1.4408)	PN-EN 10213-4
CF8M	ASTM A 351
S 355 J2G3 ; (1.0570)	PN-EN 10025
13CrMo4-4; (1.7335)	PN-EN 10028
X6CrNiMoTi 17-12-2 ; (1.4571)	PN-EN 10088
X17CrNi 16-2 ; (1.4057)	PN-EN 10088
X105CrMo17; (1.4125)	PN-EN 10088
C45 (1.0503)	PN-EN 10083-1
X30Cr13 (1.4028)	PN-EN 10088
8.8	EN 20898-1
A4-70 *)	EN ISO 3506-2
42CrMo4 (1.7225)	EN 10269
21CrMoV5-7 (1.7709)	EN 10269
X6NiCrTiMoVB 25-15-2 (1.4980)	EN 10269

NOTE:

*) to be applied for nominal pressures PN10…CL600

Hardening of valve internal surfaces comprises:

a) stelliting – padding of surfaces with stellite: ~40HRC

b) CrN coating – introducing chromium nitride to external layer of detail, to the depth of ca.0.1 mm:~950HV

c) heat treatment: valve plug (~45HRC), valve seat (~35HRC), stem (~35HRC), cages (~35HRC), guide sleeve (~45HRC), pilot (~55HRC).

Table 3…9. Allowable working overpressure for materials at relevant temperatures

Table 3.	Material: GP240GH (1.0619) as per PN-EN 10213-2							
PN / CL	Standard	Temperature [°C]						
		-10…50	100	150	200	250	300	350	400
		Allowable working pressure [bar]							
PN10	EN 1092-1	10	9,2	8,8	8,3	7,6	6,9	6,4	5,9
PN16		16	14,8	14	13,3	12,1	11	10,2	9,5
CL150	PN-EN 1759-1	17,3	15,4	14,6	13,8	12,1	10,2	8,4	6,5
PN25	EN 1092-1	25	23,2	22	20,8	19	17,2	16	14,8
PN40		40	37,1	35,2	33,3	30,4	27,6	25,7	23,8
CL300	PN-EN 1759-1	45,3	40,1	38,1	36	32,9	29,8	27,8	25,7
PN63	EN 1092-1	63	58,5	55,5	52,5	48	43,5	40,5	37,5
PN100		100	92,8	88	83,3	76,1	69	64,2	59,5
CL600	PN-EN 1759-1	90,5	80,2	76,1	72	65,8	59,7	55,5	51,4
CL900		136	120	114	108	98,7	89,5	83,3	77,1
PN160		160	148,5	140,9	133,3	121,9	110,4	102,8	95,2
PN250		250	232,1	220,2	208,3	190,4	172,6	160,7	148,8
CL1500		226	201	190	180	165	149	139	129
PN320		320	297,1	281,9	266,6	243,8	220,9	205,7	190,4
PN400		400	371,4	352,3	333,3	304,7	276,1	257,1	238
CL2500		377	334	317	300	274	249	231	214

NOTES:

1. It is allowed to apply carbon steel and acid proof cast steel for temperatures lower than given in Tables 3...9, provided that working pressure is reduced respectively, working temperature impact tests are performed and cast is heat treated. Details are to be consulted with manufacturer.
2. Working pressure for intermediate temperature values can be calculated by interpolation.
3. Temperature range for flanged connections: up to +537°C, for welding connections: up to +650°C

Table 4.	Material: G17CrMo 9-10 (1.7379) as per PN-EN 10213-2																	
PN / CL	Standard	Temperature [°C]																
		-10…50	100	150	200	250	300	350	400	425	450	475	500	510	520	530	540	550
		Allowable working pressure [bar]																
PN10	-	10	10	10	10	10	10	9,7	9,2	9	8,8	7,6	6,4	5,6	4,9	4,2	3,7	3,2
PN16		16	16	16	16	16	16	15,6	14,8	14,4	14	12,1	10,2	8,9	7,8	6,8	5,9	5,1
CL150	PN-EN 1759-1	19,5	17,7	15,8	14	12,1	10,2	8,4	6,5	5,6	4,7	3,7	2,8	2,4	2	1,7	1,4	-
PN25	EN 1092-1	25	25	25	25	25	25	24,4	23,2	22,6	22	19	16	14	12,2	10,7	9,2	8
PN40		40	40	40	40	40	40	39	37,1	36,1	35,2	30,4	25,7	22,4	19,6	17,1	14,8	12,9
CL300	PN-EN 1759-1	51,7	51,5	50,2	48,3	46,3	42,8	40,2	36,6	35,1	33,8	31,7	28,2	26,6	23,5	20,6	17,8	15,5
PN63	EN 1092-1	63	63	63	63	63	63	61,5	58,5	57	55,5	48	40,5	35,4	30,9	27	23,4	20,4
PN100		100	100	100	100	100	100	97,6	92,8	90,4	88	76,1	64,2	56,1	49	42,8	37,1	32,3
CL600	PN-EN 1759-1	103	103	100	96,7	92,6	85,7	80,4	73,1	70,2	67,6	63,3	56,4	53,3	47,1	41,1	35,7	31,1
CL900		155	155	151	145	139	129	121	110	105	101	95	84,6	79,9	70,6	61,7	53,5	46,6
PN160		160	160	160	160	160	160	156,1	148,5	144,7	140,9	121,8	102,8	88,9	78,4	68,5	59,4	51,8
PN250		250	250	250	250	250	250	244	232,1	226,1	220,2	190,4	160,7	140,4	122,6	107,1	92,8	80,9
CL1500		259	258	251	242	232	214	201	183	175	169	158	141	133	118	103	89,1	77,7
PN320		320	320	320	320	320	320	312,3	297,1	289,5	281,9	243,7	205,7	179,8	156,9	137,1	118,8	103,6
PN400		400	400	400	400	400	400	390,4	371,4	361,8	352,3	304,7	257,1	224,7	196,1	171,4	148,5	129,5
CL2500		431	429	418	403	386	357	335	305	292	282	264	235	222	196	171	149	130

Table 5.	Material: GX5CrNiMo 19-11-2 (1.4408) as per PN-EN 10213-4																		
PN / CL	Standard	Temperature [°C]																	
		-10…50	100	150	200	250	300	350	400	425	450	475	500	510	520	530	540	550	600
		Allowable working pressure [bar]																	
PN10	EN 1092-1	10	10	9	8,4	7,9	7,4	7,1	6,8	-	6,7	-	6,6	-	-	-	-	6,5	5,6
PN16		16	16	14,5	13,4	12,7	11,8	11,4	10,9	-	10,7	-	10,5	-	-	-	-	10,4	8,9
CL150	PN-EN 1759-1	17,9	16,3	14,9	13,5	12,1	10,2	8,4	6,5	5,6	4,7	3,7	2,8	2,4	2	1,7	1,4	-	-
PN25	EN 1092-1	25	25	22,7	21	19,8	18,5	17,8	17,1	-	16,8	-	16,5	-	-	-	-	16,3	14
PN40		40	40	36,3	33,7	31,8	29,7	28,5	27,4	-	26,9	-	26,4	-	-	-	-	26	22,4
CL300	PN-EN 1759-1	46,7	42,5	38,9	35,3	32,9	30,5	28,8	27,6	27,2	26,9	26,6	26,4	26,3	22,5	22,4	22,3	22,2	-
PN63	EN 1092-1	63	63	57,3	53,1	50,1	46,8	45	43,2	-	42,4	-	41,7	-	-	-	-	41,1	35,4
PN100		100	100	90,9	84,2	79,5	74,2	71,4	68,5	-	67,3	-	66,1	-	-	-	-	65,2	56,1
CL600	PN-EN 1759-1	93,4	85	77,8	70,6	65,8	61	57,6	55,2	54,5	53,8	53,3	52,8	52,6	44,9	44,8	44,6	44,4	-
CL900		140	127	117	106	98,6	91,4	86,4	82,8	81,7	80,6	79,9	79,2	78,9	67,4	67,1	66,9	66,7	-
PN160		160	160	145,5	134,8	127,2	118,8	114,2	109,7	-	107,8	-	105,9	-	-	-	-	104,3	89,9
PN250		250	250	227,3	210,7	198,8	185,7	178,5	171,4	-	168,4	-	165,4	-	-	-	-	163	140,4
CL1500		233	212	194	176	164	152	144	138	136	134	133	132	132	112	112	111	111	-
PN320		320	320	291	269,7	254,4	237,7	228,5	219,4	-	215,6	-	211,8	-	-	-	-	208,7	179,8
PN400		400	400	363,8	337,1	318	297,1	285,7	274,2	-	269,5	-	264,7	-	-	-	-	260,9	224,7
CL2500		389	354	324	294	274	254	240	230	227	224	222	220	219	187	187	186	185	-

Table 7.	Material: WCB as per ASTM A216									
PN / CL	Standard	Temperature [˚C]								
		-10…50	100	150	200	250	300	350	375	400
		Allowable working pressure [bar]								
PN10	EN 1092-1	10	10	9,7	9,4	9	8,3	7,9	7,7	6,7
PN16		16	16	15,6	15,1	14,4	13,4	12,8	12,4	10,8
CL150	PN-EN 1759-1	19,3	17,7	15,8	14	12,1	10,2	8,4	7,4	6,5
PN25	EN 1092-1	25	25	24,4	23,7	22,5	20,9	20	19,4	16,9
PN40		40	40	39,1	37,9	36	33,5	31,9	31,1	27
CL300	PN-EN 1759-1	50	46,4	45,1	43,9	41,8	38,9	36,9	36,6	34,6
PN63	EN 1092-1	63	63	61,5	59,6	56,8	52,7	50,3	49	42,5
PN100		100	100	97,7	94,7	90,1	83,6	79,8	77,8	67,5
CL600	PN-EN 1759-1	100,1	92,8	90,6	87,8	83,6	77,5	74	72,9	69,1
CL900		150,1	139,2	135,7	131,4	125,1	116,1	110,8	109,5	103,4
PN160		159,2	147,6	143,9	139,4	132,7	123,1	117,5	116,1	109,7
PN250		241,4	223,5	217,8	211,2	201,1	186,6	178,1	175,8	166,2
CL1500		250,5	231,9	226	219,2	208,7	193,6	184,8	182,4	172,5
PN320		313	289,9	282,6	273,9	260,8	242	231	227,9	215,6
PN400		396,4	367,3	358	346,9	330,3	306,6	292,6	288,6	273,1
CL2500		417,2	386,6	376,9	365,1	347,7	322,7	308	303,8	287,5

Table 6.	Material: G20Mn5 (1.6220) wg PN-EN 10213-3						
PN / CL	Norma	Temperature [˚C]					
		-40	100	150	200	250	300
		Allowable working pressure [bar]					
PN10	-	6	6	3,8	3,6	3,48	3,4
PN16		16	16	10,1	9,6	9,28	9,07
PN25		25	25	15,8	15	14,5	14,2
PN40		40	28	28	27	26	25
PN63		63	59	58	55	53	51
PN100		100	95	92	87	85	82
PN160		160	152	148	140	136	132

Table 8.	Material: WC9 as per ASTM A217																			
PN / CL	Standard	Temperature [˚C]																		
		-10…50	100	150	200	250	300	350	375	400	425	450	475	500	510	520	525	530	540	550
		Allowable working pressure [bar]																		
PN10	EN 1092-1	10	10	10	10	10	10	10	10	9,9	9,7	9,5	7,3	5,5	5	4,4	-	3,9	3,4	2,9
PN16		16	16	16	16	16	16	16	16	15,9	15,6	15,3	11,7	8,9	8	7,1	-	6,2	5,4	4,7
CL150	PN-EN 1759-1	19,5	17,7	15,8	14	12,1	10,2	8,4	7,4	6,5	5,6	4,6	3,7	2,8	-	-	1,9	-	1,3	-
PN25	EN 1092-1	25	25	25	25	25	25	25	25	24,8	24,4	23,9	18,3	14	12,6	11,2	-	9,8	8,5	7,4
PN40		40	40	40	40	40	40	40	40	39,7	39	38,3	29,2	22,3	20,2	18	-	15,7	13,6	12
CL300	PN-EN 1759-1	51,7	51,5	50,3	48,7	46,3	42,9	40,4	38,9	36,5	35,2	33,7	31,7	27,7	-	-	21,6	-	-	15,3
PN63	EN 1092-1	63	63	63	63	63	63	63	63	62,5	61,5	60,3	46	35,2	31,9	28,3	-	24,8	21,4	18,8
PN100		100	100	100	100	100	100	100	100	99,2	97,6	95,6	73,1	55,9	50,6	44,9	-	39,3	34	29,9
CL600	PN-EN 1759-1	103,4	103,1	100,3	97,5	92,7	85,7	80,4	77,6	73,3	70,2	67,7	63,4	55,7	-	-	43,3	-	-	30,7
CL900		155,1	154,6	150,6	146,2	139	128,6	120,7	116,5	109,8	105,4	101,4	95,1	83,4	-	-	64,9	-	-	46
PN160		164,5	163,9	159,5	154,7	147,4	136,4	128	123,6	116,5	111,8	107,6	100,8	87,3	-	-	68,9	-	-	48,8
PN250		249,2	248,1	239,8	231,2	222,6	206,6	193,8	187	176,4	169,2	162,9	152,5	122,2	-	-	104,4	-	-	74,1
CL1500		258,6	257,7	250,8	244	231,8	214,4	201,1	194,1	183,1	175,6	169,1	158,2	138,9	-	-	108,4	-	-	76,9
PN320		323,2	321,9	312,3	302,3	289,2	268	251,4	242,5	228,8	219,4	211,4	197,8	165,7	-	-	135,4	-	-	96
PN400		409,4	408	397,1	385,7	366,8	339,4	318,5	307,1	289,7	277,9	267,7	250,7	218,5	-	-	171,5	-	-	121,5
CL2500		430,9	429,5	418,3	406,5	386,2	357,2	335,3	323,2	304,9	292,5	281,8	263,9	231,7	-	-	180,5	-	-	127,9

Table 9.	Material: CF8M as per ASTM A351																								
PN / CL	Standard	Temperature [˚C]																							
		-10…50	100	150	200	250	300	350	375	400	425	450	475	500	510	520	525	530	540	550	575	600	625	649
		Allowable working pressure [bar]																							
PN10	EN 1092-1	8,9	7,8	7,1	6,6	6,1	5,8	5,6	5,5	5,4	5,4	5,3	5,3	5,2	5,2	5,2	-	5,2	5,1	5,1	4,7	3,8	-	-
PN16		14,3	12,5	11,4	10,6	9,8	9,3	9	8,8	8,7	8,6	8,5	8,5	8,4	8,3	8,3	-	8,3	8,3	8,2	7,6	6,1	-	-
CL150	PN-EN 1759-1	18,4	16	14,8	13,6	12	10,2	8,4	7,4	6,5	5,6	4,6	3,7	2,8	-	-	1,9	-	1,4	-	-	-	-	-
PN25	EN 1092-1	22,3	19,5	17,8	16,5	15,5	14,6	14,1	13,8	13,6	13,5	13,4	13,3	13,2	13,1	13,1	-	13	13	12,9	12	9,6	-	-
PN40		35,6	31,3	28,5	26,4	24,7	23,4	22,6	22,1	21,8	21,6	21,4	21,2	21	21	20,9	-	20,8	20,8	20,7	19,1	15,5	-	-
CL300	PN-EN 1759-1	48,1	42,3	38,6	35,8	33,5	31,6	30,4	29,6	29,3	29	29	28,7	27,3	-	-	25,2	-	-	24	22,9	19,9	15,7	12,8
PN63	EN 1092-1	56,1	49,2	44,9	41,6	38,9	36,9	35,5	34,9	34,4	34	33,7	33,5	33,2	33	32,9	-	32,8	32,7	32,6	30,2	24,4	-	-
PN100		89,1	78,1	71,3	66	61,8	58,5	56,4	55,3	54,5	54	53,4	53,1	52,6	52,4	52,2	-	52,1	51,9	51,7	47,9	38,7	-	-
CL600	PN-EN 1759-1	96,3	84,5	77,1	71,2	66,7	63,1	61	59,8	58,9	58,3	57,7	57,3	54,8	-	-	50,6	-	-	47,8	45,5	39,8	31,7	25,5
CL900		144,4	126,8	115,6	107	100,2	95	91,3	89,7	88,2	87,3	86,6	86	82,1	-	-	75,9	-	-	71,8	68,3	59,7	47,5	38,3
PN160		153,1	134,4	122,6	113,5	106,3	100,7	96,8	95,1	93,6	92,6	91,8	91,2	87,1	-	-	80,5	-	-	76,2	72,5	63,3	50,4	40,3
PN250		231,9	203,3	185,4	171,9	160,9	152,4	146,7	143,9	141,7	140,3	139,1	138,1	131,7	-	-	121,8	-	-	115,4	109,8	95,9	76,3	61
CL1500		240,6	210,9	192,4	178,4	167	158,1	152,2	149,3	147,1	145,6	144,3	143,3	136,7	-	-	126,4	-	-	119,8	114	99,5	79,2	63,8
PN320		300,8	263,7	240,6	223	208,7	197,6	190,3	186,7	184	182,1	180,3	179,2	170,9	-	-	158	-	-	149,7	142,5	124,4	98,9	79,2
PN400		381	334,1	304,8	282,4	264,2	250,3	241,1	236,5	233,1	230,7	228,4	227	216,6	-	-	200,2	-	-	189,5	180,5	157,7	125,1	100,4
CL2500		401	351,7	320,8	297,2	278,1	263,5	253,8	249	245,4	242,9	240,4	238,9	228	-	-	210,7	-	-	199,5	190	166	131,7	106,5

DESIGN

Single-ported globe control valves Z1B are recommended for application under heavy-duty working conditions, with excessive noise, flashing or choked flow. Selection of designs and materials depends on working conditions. It is based on computer-aided calculations of flow coefficients, noise level, fluid status, and effectiveness of such actions depends on data submitted by customer. Application of perforated control elements allows noise reduction by 10dBA regarding execution with contoured plug. Further noise reduction (by 5 dBA) can be achieved by application of choke cage, which causes reduction in pressure drop between plug and seat. Such design is also recommended in case of choked flow, cavitation and flashing. Perforated structures feature higher pressure recovery coefficient FL, which allows achievement of higher flow at same Kv_s and Δp as in basic design. Customers shall also appreciate possibility of achieving maximum flow ratio for all nominal sizes and control characteristics, and reduction in actuator costs due to application of balanced plugs. In case of compressive media it is advisable to apply diffusers at the valve outlet. In justified cases (noise, choked flow) diffusers can be fitted with additional perforated choke structures in the form of plates assembled between flanges or welded in diffuser interior. On customer's request, also when flow conditions justify such solution, special executions are recommended concerning materials, flow ratios, control characteristics, leakage class, etc.

Table 9. Packing types with application ranges.

Packing	PN	Temperature [°C]		
		Bonnet		
		Standard	Extension	Bellow seal
PTFE-V PTFE + Graphite PTFE-V / TA-LUFT	up to CL600)*	-46...+200	-198...-46 +200...+300	-100...+200
Graphite Graphite / TA-LUFT	up to CL2500)*	+200...+300	+300...+537 ,(+650)**	+200...+400

)* PN10…40; CL150…3000 for below seal bonnet)** for welding ends valves

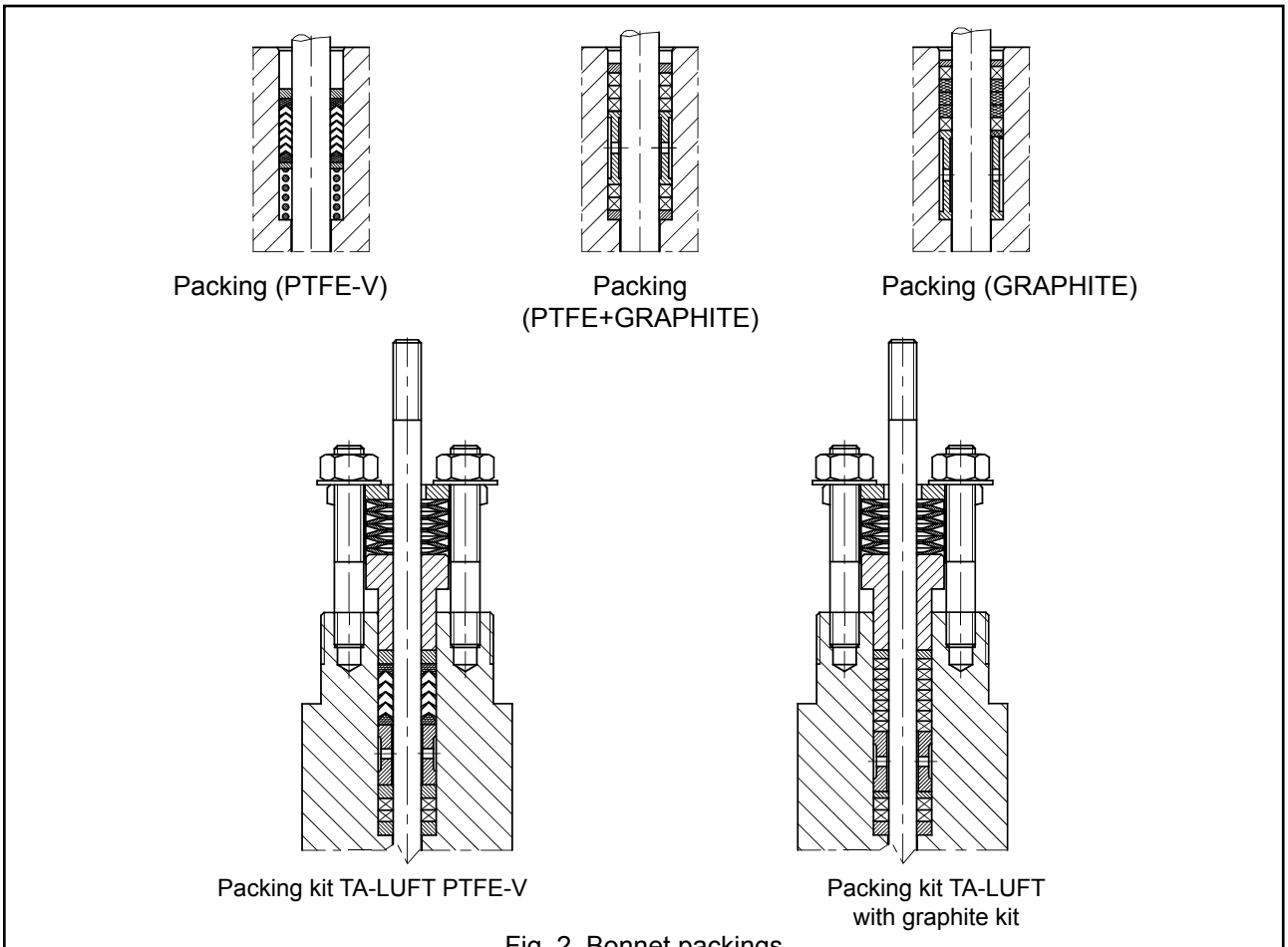

Fig. 2. Bonnet packings

Table 11: Flow ratios Kv_s.

Kvs		Stroke	Seat diameter D	F_D		Nominal size DN								
				IV kl.	V kl.									
L	P	[mm]	[mm]	[kN]		25	40	50	80	100	150	200	250	300
10		20	20,64	0,33	2,1	• K1**)	K2	K2						special execution, technical data according to individual inquiries
16			25,25	0,4	2,6		K1	K2						
25			31,72	0,5	3,3		• K1	K1	K2					
40		38	41,25	0,7	4,6			• K1	K2	K2				
63			50,8	0,8	5,2				K1	K2	K2			
94			66,7	1,1	7,2				• K0	K1	K2	K2		
125		50	88,9	1,4	9,1					K1	K2	K2	K2	
160										• K1	K2	K2	K2	
200		63	107,92	1,7	11						K1	K2	K2	
250											K1	K2	K2	
320		80	126,95	2,0	13						K1	K2	K2	
500		100	158,72	2,5	16							K1	K2	
630			203,2	3,2	21								K1	
800	-												K1	
Calculation coefficients														
F_L=0,95 ; X_T=0,78; Fd=0,1; xFz=0,75														

NOTE

1. • - no executions for PN250…CL2500
2. **) - for PN10…CL300 - K0
3. „K" - maximum number of choke cages in valve.
4. The number of choked cages does not concern the balanced valves by a pilot.

K0 - no choke cages,
K1 - one choke cage,
K2 - two choke cages.

ALLOWABLE PRESSURE DROPS Δp.

Pressure drops Δp [bar] in Table 13 apply to closed valve and they are calculated with regard to the valve drive performance. Actual pressure drops should not exceed 70% of allowable working pressure for given nominal pressure, used material and working temperature, as per tables 3…9.

$$\Delta p = \frac{Fs - F_D}{0{,}785 \cdot 10^{-4} \cdot D^2} \quad \text{or} \quad Fs = 0{,}785 \cdot 10^{-4} \cdot D^2 \cdot \Delta p + F_D$$

where
- Δp [bar] - calculated pressure drop
- Fs [kN] - actuator available force (Table 12)
- F_D [kN] - valve plug to valve seat pressure (Table 11)
- D [mm] - valve seat diameter (Table 11)

NOTE

1. Valves with balanced plug and with gasket are manufactured only in leakage class IV. For balanced plugs assume the available force of F_S at least equal to F_D for class V (Table 11).
2. For valves relieved with a remote control, drive disposition forces need to be agreed on with the manufacturer.

Table 12: Available force F_S [kN] of pneumatic actuators

Actuator size	Direct actuator P ; P1			Reverse actuator R ; R1					
	Supply pressure [kPa]			Spring range [kPa]					
	140	250	400	20 - 100	40 - 120; 40 - 200	60 - 140	80 - 240	120 - 280	180 - 380
160	0,64	2,4	4,8	0,32	0,64	0,96	1,28	1,92	-
250	1,0	3,8	7,5	0,5	1,0	1,5	2,0	3,0	-
400	1,6	6,0	12,0	0,8	1,6	2,4	3,2	4,8	-
630	2,5	9,5	18,9	1,3	2,5	3,8	5,0	7,6	11,3
R-630T	-	-	-	2,6	5,0	7,6	10,0	15,2	22,6
1000	4,0	15,0	30,0	2,0	4,0	6,0	8,0	12,0	18,0
1500	6,0	22,5	45,0	3,0	6,0	9,0	12,0	18,0	27,0
1500T	12,0	45,0	90,0	6,0	12,0	18,0	24,0	36,0	54,0

NOTE:

1. For direct actuators P; P1 adopted spring range is 20 – 100 kPa
2. For electric and other actuators Δp value can be calculated using above formula and data from Table 11, taking nominal load capacity as available force FS, as per actuator data sheet.

Table 13: Pressure drops Δp [bar] for valves with pneumatic actuators, leakage class class IV and V

Valve seat diameter [mm]	Actuator size	Air-to-close Spring range 20…100 kPa						Air-to-open											
		IV class			V class			IV class						V class					
		Supply pressure [kPa]						Spring range [kPa]						Spring range [kPa]					
		140	250	400	140	250	400	20…100	40…120 40…200	60…140	80…240	120…280	180…380	20…100	40…120 40…200	60…140	80…240	120…280	180…380
		Δp [bar]																	
20,64	160	9	62	133	-	7	79	-	9	19	28	47	-	-	-	-	-	-	-
	250	20	100	210	-	48	159	5	20	34	49	78	-	-	-	-	-	26	-
	400	37	166	280	-	115	280	14	37	60	84	131	-	-	-	9	32	79	-
	630	65	272	280	11	218	280	27	65	103	140	216	280	-	11	49	86	162	274
	R-630T	-	-	-	-	-	-	65	140	216	280	280	280	11	86	162	237	280	280
25,25	160	4	40	87	-	-	43	-	4	11	17	30	-	-	-	-	-	-	-
	250	12	67	142	-	23	98	2	12	22	32	52	-	-	-	-	-	8	-
	400	24	112	232	-	68	188	8	24	40	56	88	-	-	-	-	12	44	-
	630	42	180	280	-	136	280	17	42	67	92	143	218	-	-	23	48	98	174
	R-630T	-	-	-	-	-	-	42	92	143	193	280	280	-	48	98	149	249	280
31,72	160	1,5	24	54	-	-	19	-	1	5	9	17	-	-	-	-	-	-	-
	250	6	41	88	-	5	53	-	6	12	19	31	-	-	-	-	-	-	-
	400	14	70	145	-	34	110	4	14	24	34	54	-	-	-	-	-	19	-
	630	25	113	232	-	78	197	10	25	41	57	90	137	-	-	6	21	54	101
	R-630T	-	-	-	-	-	-	25	57	89	121	185	280	-	22	54	85	149	245
41,25	630	13	63	130	-	35	102	4	13	22	31	49	75	-	-	-	3	21	48
	R-630T	-	-	-	-	-	-	14	32	51	70	108	164	-	5	24	43	81	137
50,8	630	9	43	90	-	21	69	2,5	9	15	21	34	53	-	-	-	-	12	30
	1000	16	71	146	-	49	124	6	16	26	36	56	86	-	-	4	14	34	64
	1500	25	107	218	3	85	196	10	25	40	55	84	129	-	3	18	33	62	107
66,7	630	4	24	50	-	6	33	-	4	8	11	18	29	-	-	-	-	-	11
	1000	8	40	83	-	22	65	3	8	14	20	31	48	-	-	-	2	14	30
	1500	14	61	125	-	44	108	5	14	23	31	48	74	-	-	5	14	30	56
88,9	1000	4	22	46	-	10	34	1	4	7	11	17	27	-	-	-	-	5	14
	1500	7	34	70	-	21	58	3	7	12	17	27	41	-	-	-	5	14	29
107,92	1000	3	14	30	-	4	20	-	3	5	7	11	18	-	-	-	-	1	8
	1500	5	23	47	-	13	37	1	5	8	11	18	28	-	-	-	1	8	17
	1500T	11	48	96	1	37	86	5	11	18	24	37	57	-	1	8	14	27	47
126,95	1500	3	16	34	-	8	25	-	3	6	8	13	20	-	-	-	-	4	11
	1500T	8	34	70	-	25	61	3	8	13	17	27	41	-	-	4	9	18	33
158,72	1500	2	10	21	-	3	14	-	2	3	5	8	12	-	-	-	-	1	6
	1500T	5	21	44	-	14	37	2	5	8	10	17	26	-	-	1	4	10	19
203,2	1500	-	6	13	-	-	7	-	-	2	3	4,5	7	-	-	-	-	-	2
	1500T	3	13	27	-	7	21	-	3	4,5	6	10	16	-	-	-	-	5	10

NOTE:

1. In Table 13, theoretical acceptable pressure drops are included. Actual pressure drops with consideration of tolerance of spring manufacture and friction of internal parts of the actuator are lower than those given by 20%. Pressure drops chosen that way guarantee internal tightness of closing of the valves.
2. In valves working along the procedure: “increased control pressure – valve opens”, the actuator with springs ranged 40-120 kPa can be replaced with an actuator ranged 40-200 kPa, with the same pressure drops.
3. For reverse-working actuators (type R or R1), supply pressure should be higher than the upper spring range by at least 40kPa.

NOISE REDUCTION:
Should noise due to cavitation or aerodynamic phenomena exceed level acceptable by customer, it can be reduced by applying the following solutions:
- perforated valve plugs (Fig. 1a, 1b and 1d)
- silencer plates on valve outlet and/or inside of reduction joint (Fig. 3,4 and Table 13)
- reduction ends (diffusers) - (Fig. 4)

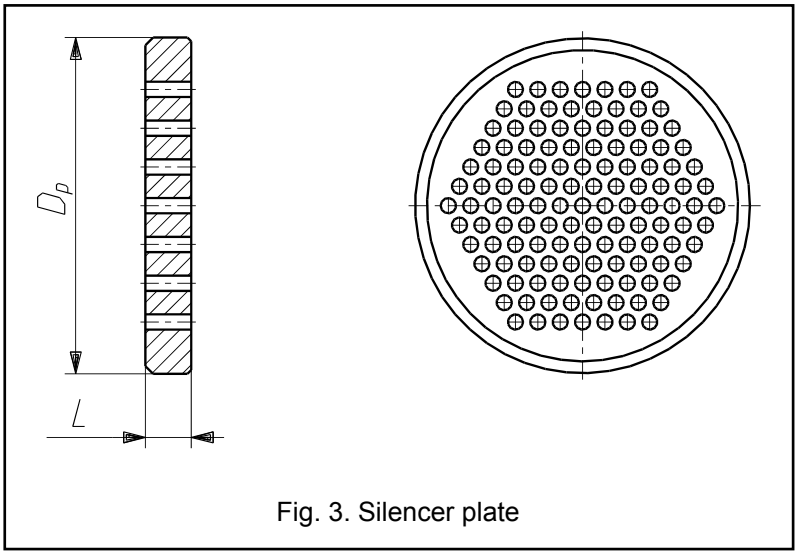

Fig. 3. Silencer plate

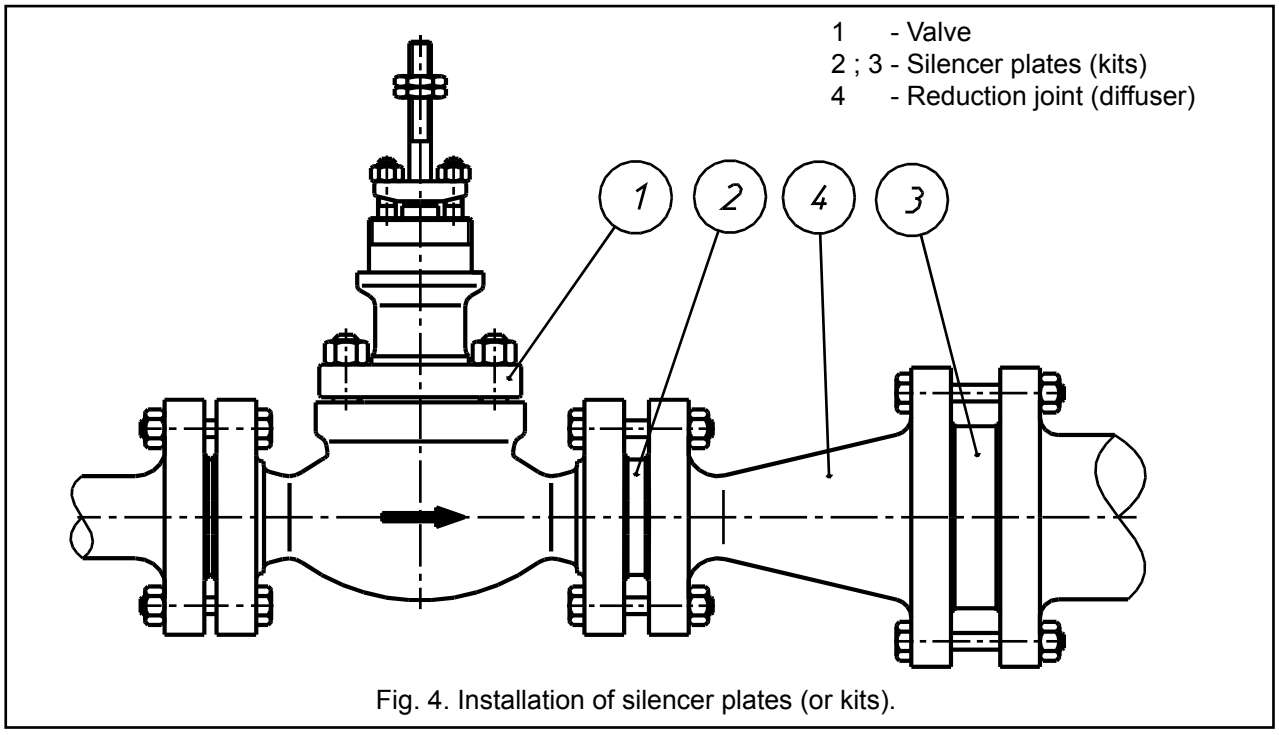

Fig. 4. Installation of silencer plates (or kits).

Table 14: Dimensions and flow ratios for silencer plates

DN	25	40	50	80	100	150	200	250	300	350
Kvs	10	25	40	94	160	320	500	800	1000	1500
	9	22,5	36	84	144	288	450	720	900	1350
	8	20	32	75	128	256	400	640	800	1200
	7	17,5	28	66	112	224	350	560	700	1050
L [mm]	5	6		10		15		20		
Dp [mm]	68	88	102	138	162	218	285	345	410	465

Multi-plate silencer kits are customized for requirements of individual processes.

DIMENSIONS AND WEIGHTS

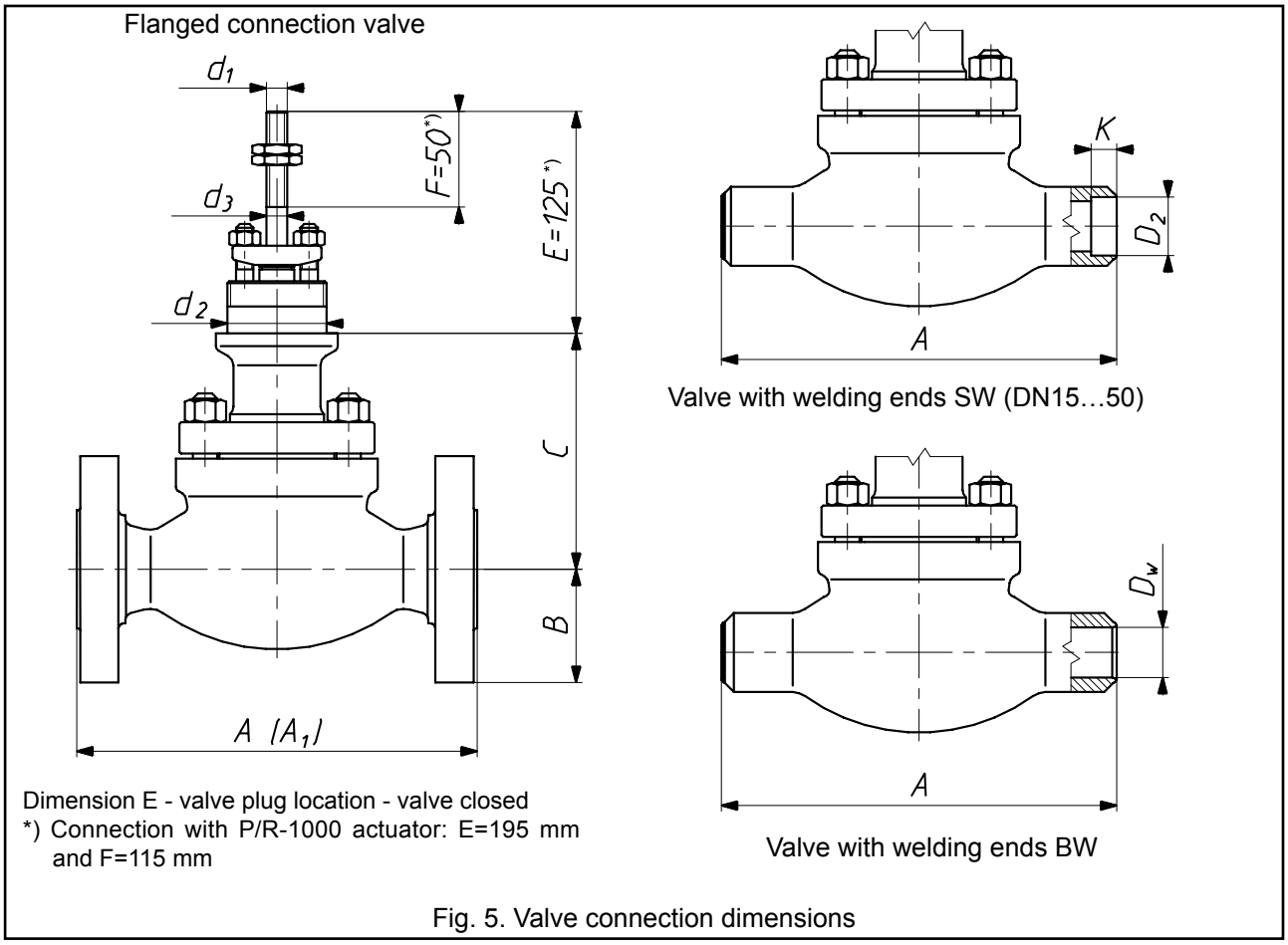

Dimension E - valve plug location - valve closed
*) Connection with P/R-1000 actuator: E=195 mm and F=115 mm

Fig. 5. Valve connection dimensions

Table 15a: Control valves connection dimensions

DN		25						40						50					
PN/CL		PN10... CL300	PN63... CL600	CL900; PN160	PN250; CL1500	PN320	PN400; CL2500	PN10... CL300	PN63... CL600	CL900; PN160	PN250; CL1500	PN320	PN400; CL2500	PN10... CL300	PN63... CL600	CL900; PN160	PN250; CL1500	PN320	PN400; CL2500
B max		63	70	75		80	90	75	85	93		98	110	83	98	108		105	118
C	DS	135		149	193			145		172	214			155		175	237		
	DW	306		320	364			306		348	385			326		345	402		
	DM	254	-	-	-	-	-	254	-	-	-	-	-	270	-	-	-	-	-
Weight [kg]		8	8,5		9,5			15,5	17,5	19	20	22	23	22	25	28	31	33	34

DN		80						100						150		
PN/CL		PN10... CL300	PN63... CL600	CL900; PN160	PN250; CL1500	PN320	PN400; CL2500	PN10... CL300	PN63... CL600	CL900; PN160	PN250; CL1500	PN320	PN400; CL2500	PN10…CL300	PN63...CL600	CL900;PN160
B max		105	145	120	133	138	153	128	138	145	155	168	185	160	178	190
C	DS	206		233	257			217		252	329			287		365
	DW	375		402	447			407		442	498			426		483
	DM	405	-	-	-	-	-	405	-	-	-	-	-	470	-	-
Weight [kg]		40	43	44	50	51	52	65	72	75	86	89	95	132	147	156

DN		200		250		
PN/CL		PN10...CL300	PN63...CL600	PN10...CL300	PN10...CL300 (kv800)	PN63...CL600
B max		190	235	258		255
C	DS	439		458		
	DW	539		558		
	DM	580	-	580	660	-
Weight [kg]		195	220	320	330	360

DN300 - special execution, technical data according to individual inquiries. (table: 15a and 15b).

NOTE: Weight of valve with standard bonnet and without actuator.

Table 15b: Control valves connection dimensions

DN	25…50	50	80	80; 100	80; 100	100	150				200	200; 250				250
Kvs	10…25	40	25	40	63; 94	125; 160	63; 94	125; 160	200; 250	320	94	125; 160	200; 250	320	500	630; 800
Stroke	20	38	20	38	38	50	38	50	63	80	38	50	63	80	100	
d_1	M12x1,25				M16x1,5				M20x1,5		M16x1,5		M20x1,5		M24x1,5	
d_2 [1)]	57,15 / 2 1/4"-16UN2A						84,15 / 3 5/16"-16NS2A				95,25 / 3 3/4"-12UN2A					
d_3	12		16				20				24					
Actuator	160 250 400 630 R-630T	630 R-630T	160 250 400 630 R-630T	630 R-630T	630 1000 1500	1000 1500	630 1000 1500	1000 1500	1000 1500 1500T	1500 1500T	1000 1500	1000 1500 1500T	1500 1500T			

NOTE:

1) For DN80 and DN100 valves with TA-LUFT packing d_2 = 84.15

Table 16. Control valve length, flanges.

DN	Dimesion A [mm]										
	PN / DIN					CL					
	10; 16; 25; 40	63 - 100	160	250 - 320	400	CL150	CL300	CL600	CL900	CL1500	CL2500
25	160	230	230	260	300	184	197	210	248	273	308
40	200	260	260	300	350	222	235	251	270	311	359
50	230	300	300	350	400	254	267	286	311	340	400
80	310	380	380	450	500	298	317	336	387	460	498
100	350	430	430	520	580	352	368	394	464	530	575
150	480	550	550	*	*	451	473	508	556	*	*
200	600	650	*	*	*	543	568	610	*	*	*
250	730	775	*	*	*	673	708	752	*	*	*
300	special execution, technical data according to individual inquiries										
* higher nominal pressures available after agreement with the manufacturer											

Note: Dimension A presented in Table 15 for CL150; CL300; CL600; CL900; CL1500; CL2500 apply to bodies with B seat (RF). For other executions dimension A_1 can be calculated using relations presented in Table 17.

Table 17. Algorithms for calculation of control valve body length for valves with flanged end

- with groove
- with races
- with ring-joint

Body type and identification PN / ANSI	Pressure CL	DN	A_1
With groove DL / (GF) With races F / (FF)	CL300	25…250	$A_1 = A + 5 \times 2$
	CL600 CL900 CL1500 CL2500		$A_1 = A - 1,5 \times 2$
With ring-joint J / (RTJ)	CL150	25…250	$A_1 = A + 6,5 \times 2$
	CL300	25…40	
	CL300	50…250	$A_1 = A + 8 \times 2$
	CL600 CL900 CL1500	25…40	$A_1 = A$
	CL2500	25	
	CL600	50…250	$A_1 = A + 1,5 \times 2$
	CL900 CL1500	50…100	
	CL900	150	
	CL2500	80	$A_1 = A + 3 \times 2$
		100	$A_1 = A + 4,5 \times 2$

Table 18: Control valve length, welding ends.

DN	Dimension A [mm]		
	Nominal pressure		
	PN 10...CL600	CL900…PN160	PN250...CL2500
25	210	230	300
40	251	260	350
50	286	300	400
80	337	380	500
100	394	430	580
150	508	550	*
200	610	*	*
250	752	*	*
300	special execution, technical data according to individual inquiries		
* higher nominal pressures available after agreement with the manufacturer			

Table 19: Butt welding ends BW.

DN	Dz [mm]	t [mm]	Dw [mm]	PN (DIN3239)									
				10	16	25	40	63	100	160	250	320	400
25	33,7	2,6	28,5	x	x	x	x	x	x				
		2,9	27,9							x			
		3,6	26,5								x		
		5	23,7									x	
		7,1	19,5 •										x
	42,4		28,2										x
40	48,3	2,6	43,1	x	x	x	x						
		2,9	42,5					x	x				
		3,6	41,1							x			
		5	38,3								x		
		6,3	35,7									x	
		10	28,3										x
50	60,3	2,9	54,5	x	x	x	x	x					
		3,2	53,9						x				
		4	52,3							x			
		6,3	47,7								x		
		8	44,3									x	
		12,5	35,3										x
80	88,9	3,2	82,5	x	x	x	x						
		3,6	81,7 •					x					
		4	80,9 •						x				
		6,3	76,3							x			
		11	66,9								x		
		12,5	63,9									x	
		17,5	53,9 •										x
	114,3		79,3										x
100	114,3	3,6	107,1	x	x	x	x						
		4	106,3					x					
		5	104,3						x				
		8	98,3							x			
		14,2	85,9								x		
		16	82,3									x	
		22,2	69,9 •										x
	139,7	20	99,7										x
150	168,3	4,5	159,3	x	x	x	x						
		5,6	157,1 •					x					
		7,1	154,1 •						x				
		12,5	143,3 •							x			
	193,7		168,7							x			
200	219,1	5,9	207,3	x	x								
		6,3	206,5			x	x						
		7,1	204,9					x					
		10	199,1 •						x				
	244,5	12,5	219,5						x				
250	273	6,3	260,4	x	x								
		7,1	258,8			x	x						
		8,8	255,4					x					
		12,5	248						x				
300	special execution, technical data according to individual inquiries												

DN	Schedule	Dz [mm]	t [mm]	Dw [mm]	ANSI (ASME 36.10 M)					
					CL150	CL300	CL600	CL900	CL1500	CL2500
1"	40	33,4	3,4	26,6	x	x	x	x		
	80		4,5	24,4					x	
	160		6,4	20,6 •						x
	XXS		9,1	15,2 •						x
1 1/2"	40	48,3	3,7	40,9 •	x	x	x	x		
	80		5,1	38,1 •	x	x	x	x	x	
	160		7,1	34,1					x	
	XXS		10,2	27,9 •						x
2"	40	60,3	3,9	52,5	x	x	x	x		
	80		5,5	49,3 •				x		
	160		8,7	42,9					x	
	XXS		11,1	38,1 •						x
3"	40	88,9	5,5	77,9 •	x	x	x			
	80		7,6	73,7 •				x		
	160		11,1	66,7					x	
	XXS		15,2	58,5						x
4"	40	114,3	6	102,3	x	x	x			
	80		8,6	97,1 •				x		
	120		11,1	92,1 •					x	
	160		13,5	87,3 •					x	
	XXS		17,1	80,1 •						x
6"	40	168,3	7,1	154,1 •	x	x				
	80		11	146,3 •			x	x		
	120		14,3	139,7 •				x		
	160		18,3	131,7 •				x		
8"	20	219,1	6,4	206,3	x	x				
	30		7	205,1		x				
	40		8,2	202,7		x				
	60		10,3	198,5 •			x			
	80		12,7	193,7 •			x			
10"	20	273	6,4	260,2	x	x				
	30		7,8	257,4		x				
	40		9,3	254,4		x				
	60		12,7	247,6 •			x			
	80		15,1	242,8 •			x			
12''	special execution, technical data according to individual inquiries									

where:

D_z [mm] - pipe external diameter,

D_w [mm] - pipe internal diameter,

t [mm] - pipe wall thickness.

NOTE:

•) - execution with reduction stubs as per Fig. 7.

Table 19 contains series of example butt welding connections.

It is allowed to execute connections for other dimensions of pipes. Should pipe dimensions fall within the range ∅B min / ∅A max (Fig. 6, Table 20), connection can be executed as cast. Otherwise reduction stub is to be welded to body end, which shall result in extension of the housing by L or 2L size (Fig. 7, Table 20). Other connection dimensions are allowed upon consulting with manufacturer.

Table 20: Dimensions of non-processed butt welding ends (executed as cast) and lengths of reduction stubs.

DN	Pressure	A max	B min	L
25	PN 10...40, CL 150, 300	38	20	50
	PN 63...100, CL 600	48	20	
	PN 160, CL 900	40	23	
	PN 250...400, CL 1500,2500	48	23	
40	PN 10...40, CL 150, 300	64	42	
	PN 63...100, CL 600	75	42	
	PN 160, CL 900	66	38	
	PN 250...400, CL 1500,2500	66	28	
50	PN 10...100, CL 150...600	80	55	
	PN 160, CL 900	80	50	
	PN 250...400, CL 1500,2500	92	42	
80	PN 10...40, CL 150, 300	110	82	75
	PN 63...100, CL 600	122	82	
	PN 160, CL 900	111	76	
	PN 250...400, CL 1500,2500	127	56	
100	PN 10...100, CL 150...600	144	102	
	PN 160, CL 900	144	102	
	PN 250...400, CL 1500,2500	165	81	
150	PN 10...40, CL 150, 300	183	160	100
	PN 63...100, CL 600	196	160	
	PN 160, CL 900	217	154	
200	PN 10...40, CL 150, 300	243	200	150
	PN 63...100, CL 600	248	200	
250	PN 10...40, CL 150, 300	291	248	
	PN 63...100, CL 600	346	248	

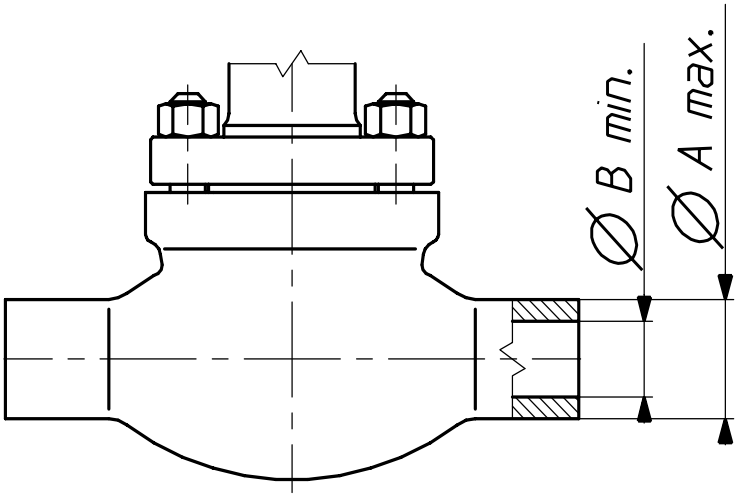

Fig. 6. Dimension of butt welding ends executed as cast

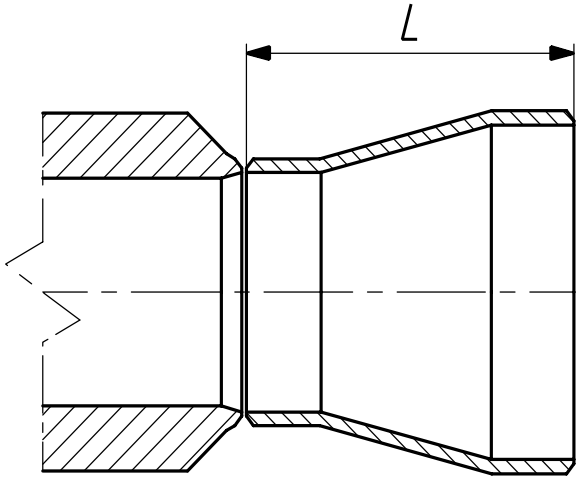

Fig. 7. Reduction stub

Table 21: SW socket welding ends.

DN	D_2	K
25	34	13
40	48,7	
50	61	16

VALVE ACTUATOR:

Pneumatic: - diaphragm multi-spring actuator as per Table 21:

P1/R1 - cast yoke, no handwheel

P1B/R1B - cast yoke, side-mounted

P/R - column type, no handwheel

PN/RN - column type, top-mounted handwheel

NOTE: P - direct action; air-to-close

R - reverse action; air-to-open

Table 22: Pneumatic actuators.

Type	Size	Diaphragm effective area [cm²]	Stroke [mm]	Revolutions per stroke
P/R ; PN/RN	160	160	20	5
	250	250		
P1/R1 ; P/R ; P1B/R1B ; PN/RN	400	400		
	630	630	20 ; 38	5 ; 9
	R-630T *)	2 x 630		
	1000	1000	38 ; 50 ; 63	8 ; 10 ; 13
P1/R1 ; P1B/R1B	1500	1500	38 ; 50 ; 63 ; 80; 100	8 ; 10 ; 13 ; 16; 20
	1500T	2 x 1500		
*) - there are no top mounted handweel for R-630T				

Table 23: Sizes and weights of pneumatic actuators P/R and PN/RN - Fig. 8.

Actuator size	D_1	D_2	H_1	H_2	Weight [kg]	
	mm				P/R	PN/RN
160	210	225	306	468	9	13,5
250	240		324	486	10	14,5
400	305		332	494	16	20,5
630	375	305	424	586	30	37
R-630T		-	638	-	45	-
1000	477	450	607	847	74	100
1500	550	-	704	-	95	-
1500T		-	1008	-	200	-

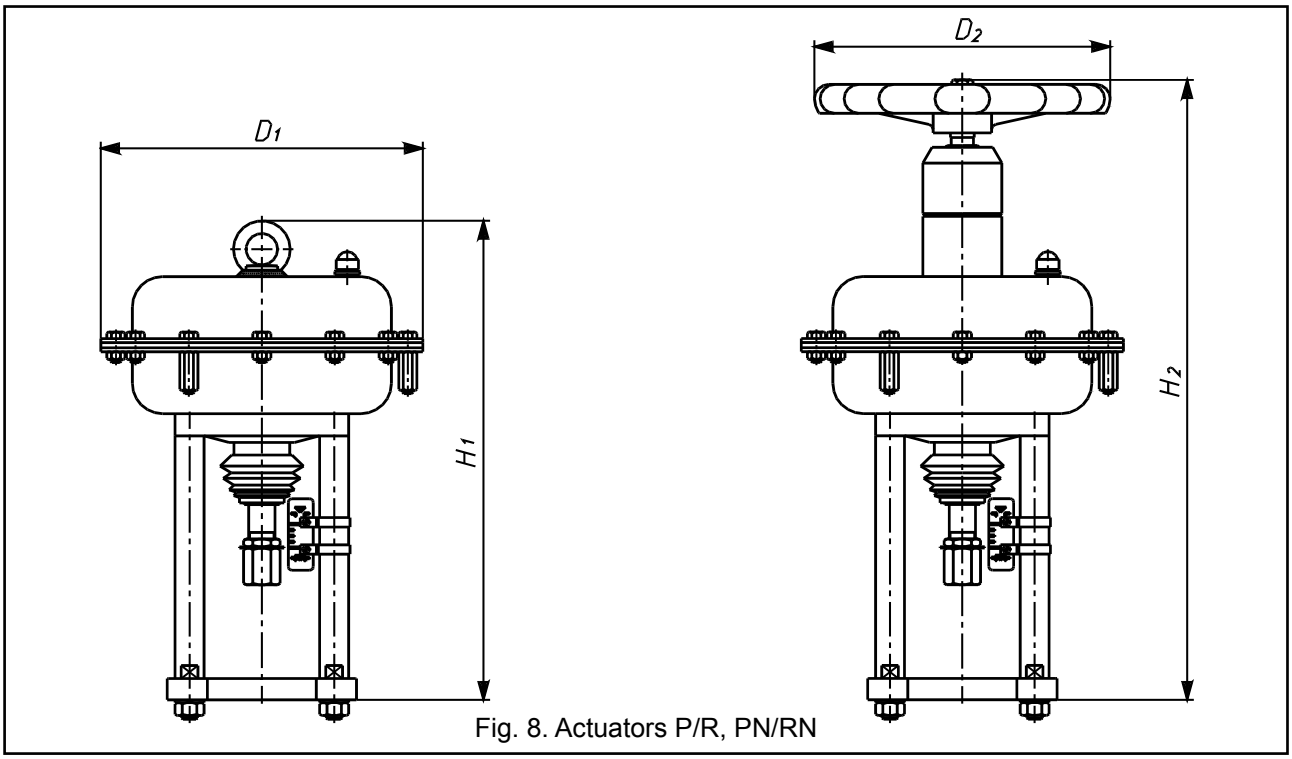

Fig. 8. Actuators P/R, PN/RN

Table 24: Sizes and weights of pneumatic actuators P1/R1 and P1B/R1B - Fig. 9

Actuator size	B	D_1	D_2	H	Weight [kg]	
	mm				P1/R1	P1B/R1B
400	255	305	225	453	20	28
630	280	375	305	548	40	50
1000	340	477	450	773	85	105
1500	410	550		833	120	150
3000				1138	225	255

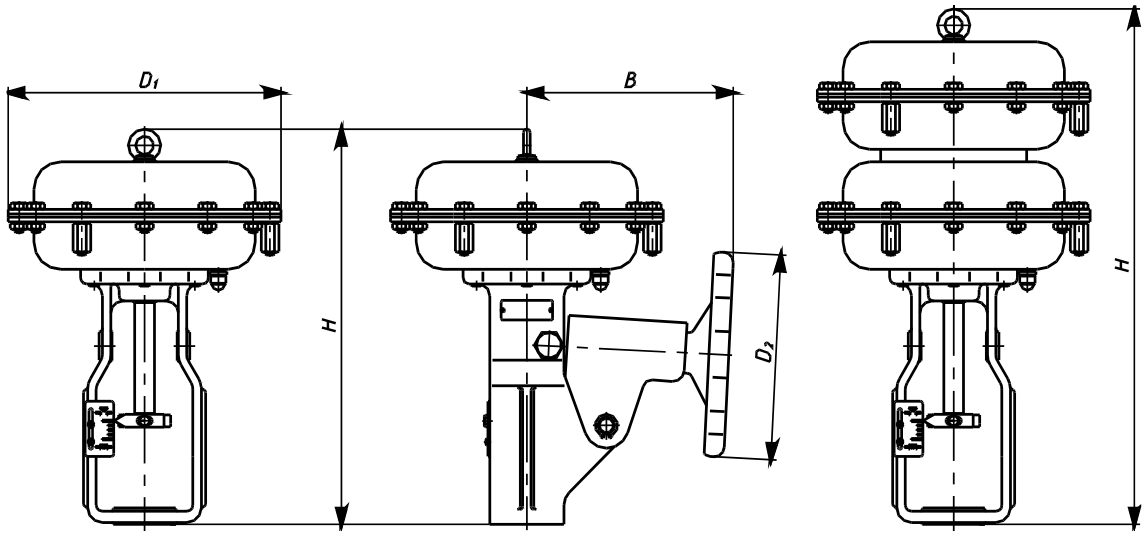

P1/R1 , P1B/R1B - 400...1500 P1/R1-3000

Fig. 9. Actuators P1/R1, P1B/R1B

Control air connections:	1/4” NPT ; NPT 1/2”, Rc 1/2”	
- tube diameters:	6x1 ; 8x1 ; 10x1; 12x1	
- spring ranges:	20...100kPa ; 40...120kPa ; 60...140kPa	- 3 springs
	40...200kPa ; 80...240kPa ; 120...280kPa	- 6 springs
	180...380kPa *)	- 12 springs
	(not applicable for actuators P/R; P1/R1-250; 400)	
For actuator P1/R1-3000 (Tandem) -	for each range double the above numbers of springs (tandem)	
- maximum supply pressure:	actuator size 160...630 - 600kPa	
	actuator size R-630T and 1000...1500 - 500kPa	
- accessories (upon request):	side-mounted handwheel (P1/R1) or topmounted handwheel (P/R) ,	
	pneumatic positioner,	
	electro-pneumatic positioner,	
	smart electro-pneumatic positioner,	
	air-set,	
	three-way solenoid valve,	
	lock-up valve,	
	position transmitter,	
	limit switches.	

Electric: - electric drives; domestic and foreign electro-hydraulic drives (for details and technical specification refer to manufacturers catalogs)
Manual: - manual drive type 20, Fig. 10 Table 25.

Table 25: Manual drives type 20 - types, sizes and weights.

Type	Stroke [mm]	d_1	d_2	H	D	rev/stroke	Weight [kg]
20-20-57-M12	20	M12x1,25	57,15	265	228	8	7,5
20-20-84-M12			84,15				
20-38-57-M12	38	M16x1,5	57,15		298	15	10
20-38-57-M16							
20-38-84-M16			84,15				
20-38-95-M16			95,25				
20-50-57-M16	50		57,15	385	457	16	16
20-50-84-M16			84,15				
20-50-95-M16			95,25				
20-63-84-M20	63	M20x1,5	84,15			20	
20-63-95-M20			95,25				
20-80-84-M20	80		84,15	533	610	19	24
20-80-95-M20			95,25				
20-100-95-M24	100	M24x1,5					

Marking:
Example: 20-38-57-M16 - manual drive type 20; stroke - 38mm; d_2=57,15mm; d_1=M16x1,5

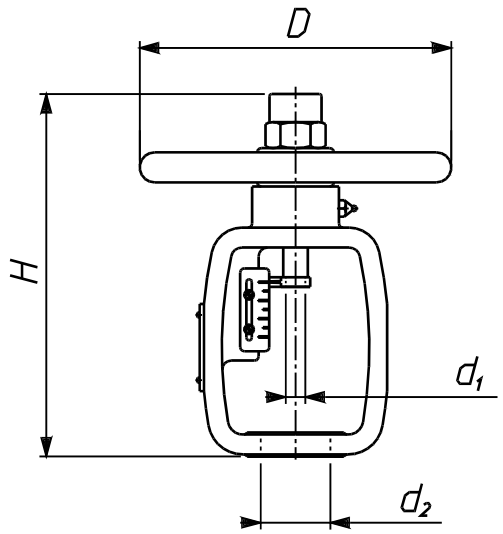

Fig. 10. Manual drive type 20.

SPECIAL OPTIONS:

- oxygen and hydrogen option:

Application of adequate materials, mechanical and chemical cleaning, inspections and assembly ensure compatibility with oxygen and hydrogen flows.

- low temperature media option:

Application of adequate materials and special bonnet design ensures effective isolation of valve drive from the impact of low temperatures. Used mostly for liquid oxygen and liquid nitrogen.

- acid gas option:

Parts of the valve can be made of materials and under conditions ensuring valve operation with gases of H_2S content as per NACE MR-0175.

- heat jacket option:

Design and technical parameters as per customer's specification.

- balanced valves with pilot:

Construction allows achievement of high leakage class at high pressure drops and reduced available force of actuator, flow direction - above the plug.

– valves with non-cast bodies:

If a special construction of the valve body is needed, it is possible to design a valve for individual customer's needs (angle valves – type L and Z).

CLASSIFICATION AND MARKING:

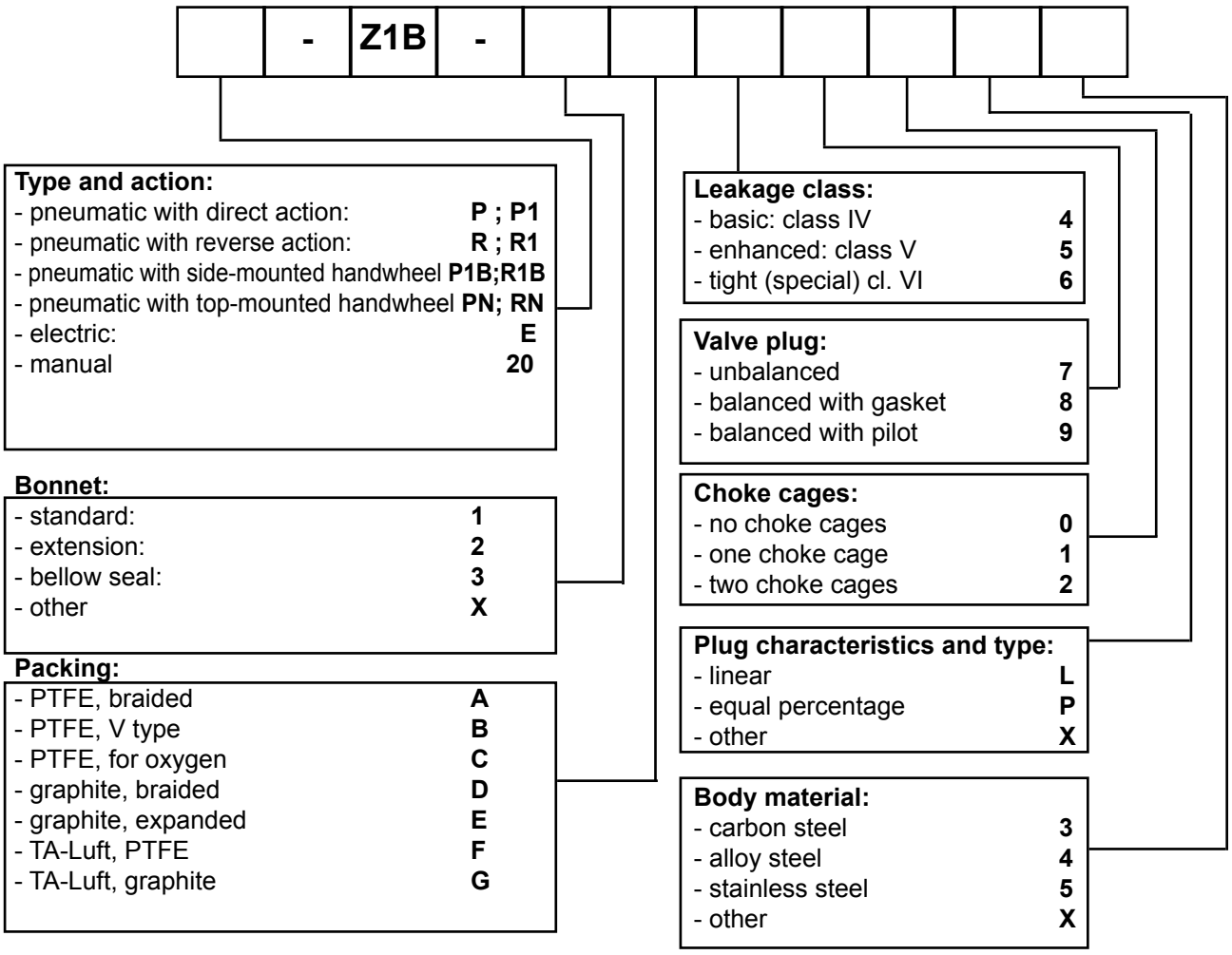

MARKING EXAMPLE:

Control valve type Z1B with pneumatic actuator of reverse type, complete with top-mounted handwheel, extension bonnet, packing: expanded graphite, leakage class cl.VI, with throttling cage, balanced equal-percentage plug, body material: stainless steel.

RN-Z1B-2E481P5

Marking is shown on valve nameplate.

Additionaly, it shows:
- nominal size [DN],
- nominal pressure [PN],
- max working temperature [TS],
- max working pressure [PS],
- test pressure [PT],
- flow ratio [Kvs],
- plug stroke [H],
- plug stroke fluid group [1 or 2],
- serial number and year of manufacture.

ORDERING:

In case of valves with choke cages please specify flow coefficients for the cage or other information that is necessary to calculate that parameter in accordance with the technical data questionnaire. Contact our staff from the Marketing and Sales Department as well as the Technical and Development Department for assistance to select the most suitable valves.